Meeting Counter

Haneda Airport Terminal 3 - 2nd Floor Arrival Lobby

Our staff will be waiting for you at the Airserve counter indicated by a red square on the map below, holding the following signboard _____

Meeting Service Counter

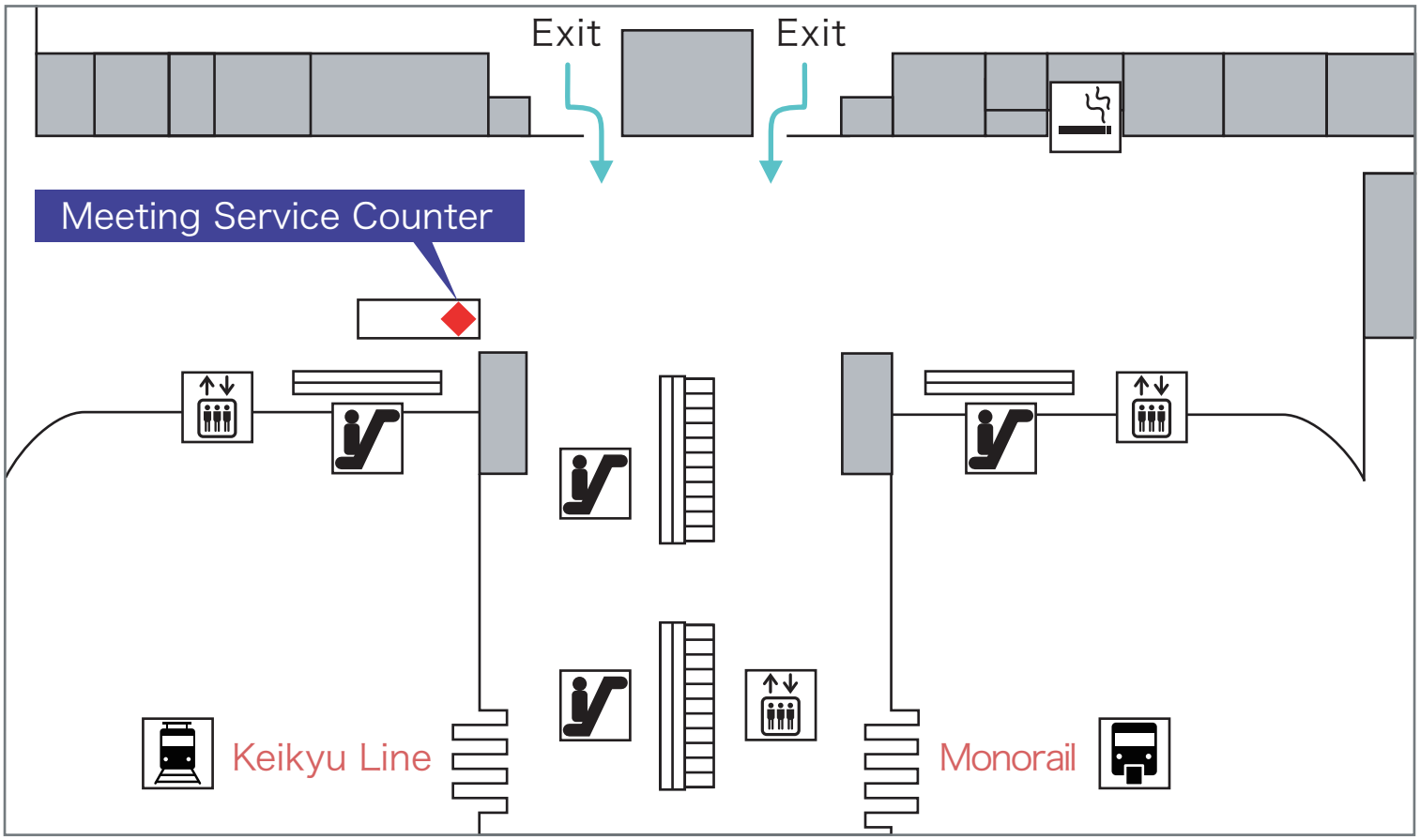

This service is performed by Airserve Co., Ltd.
Airserve Haneda Airport office phone number is 03-6704-0859.